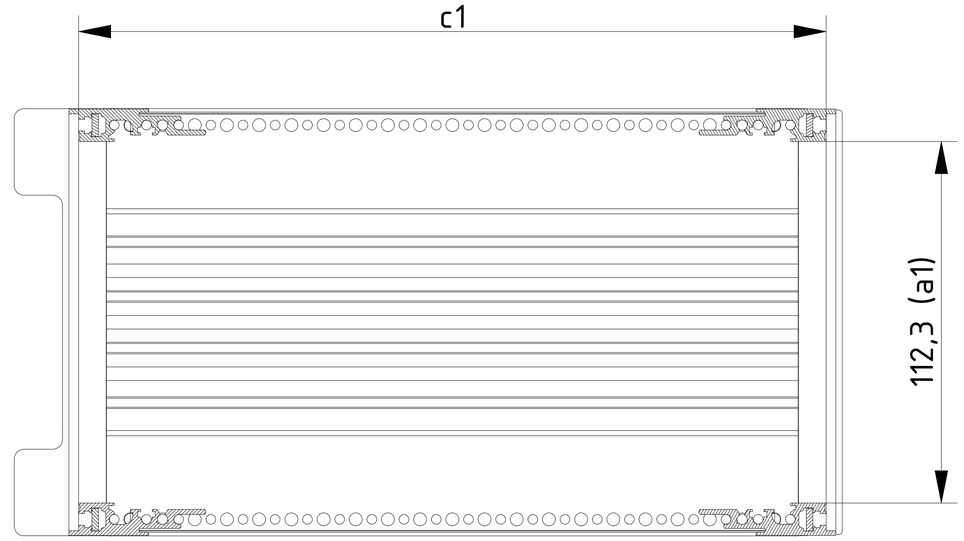
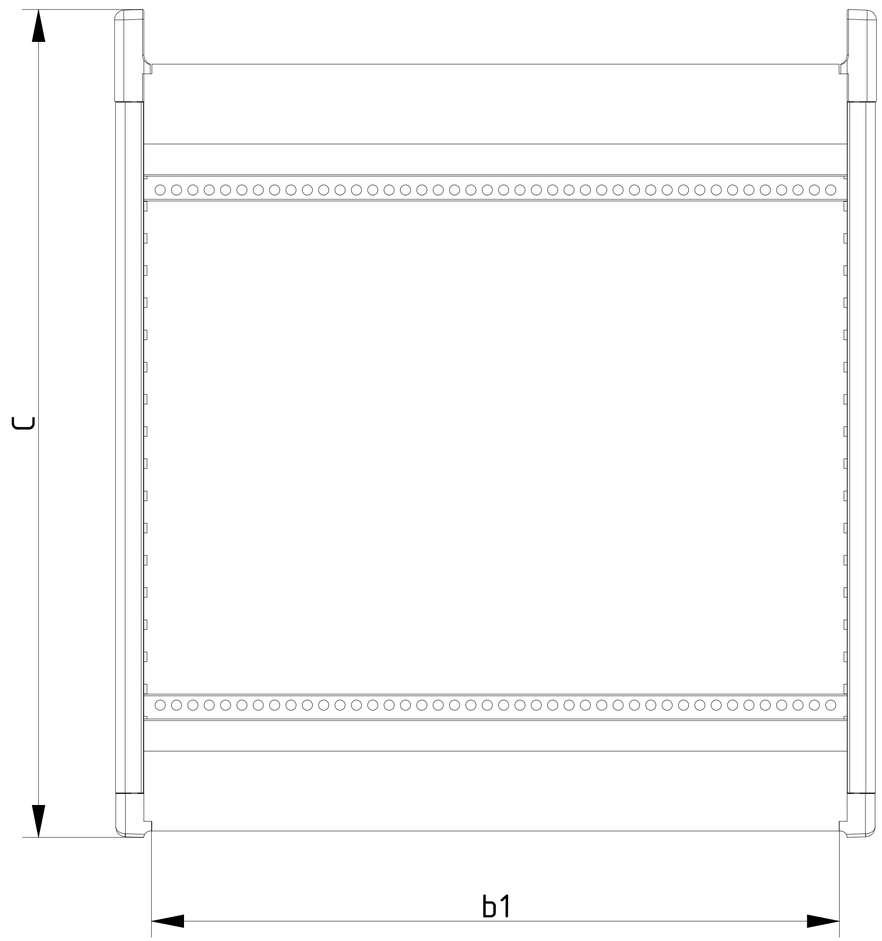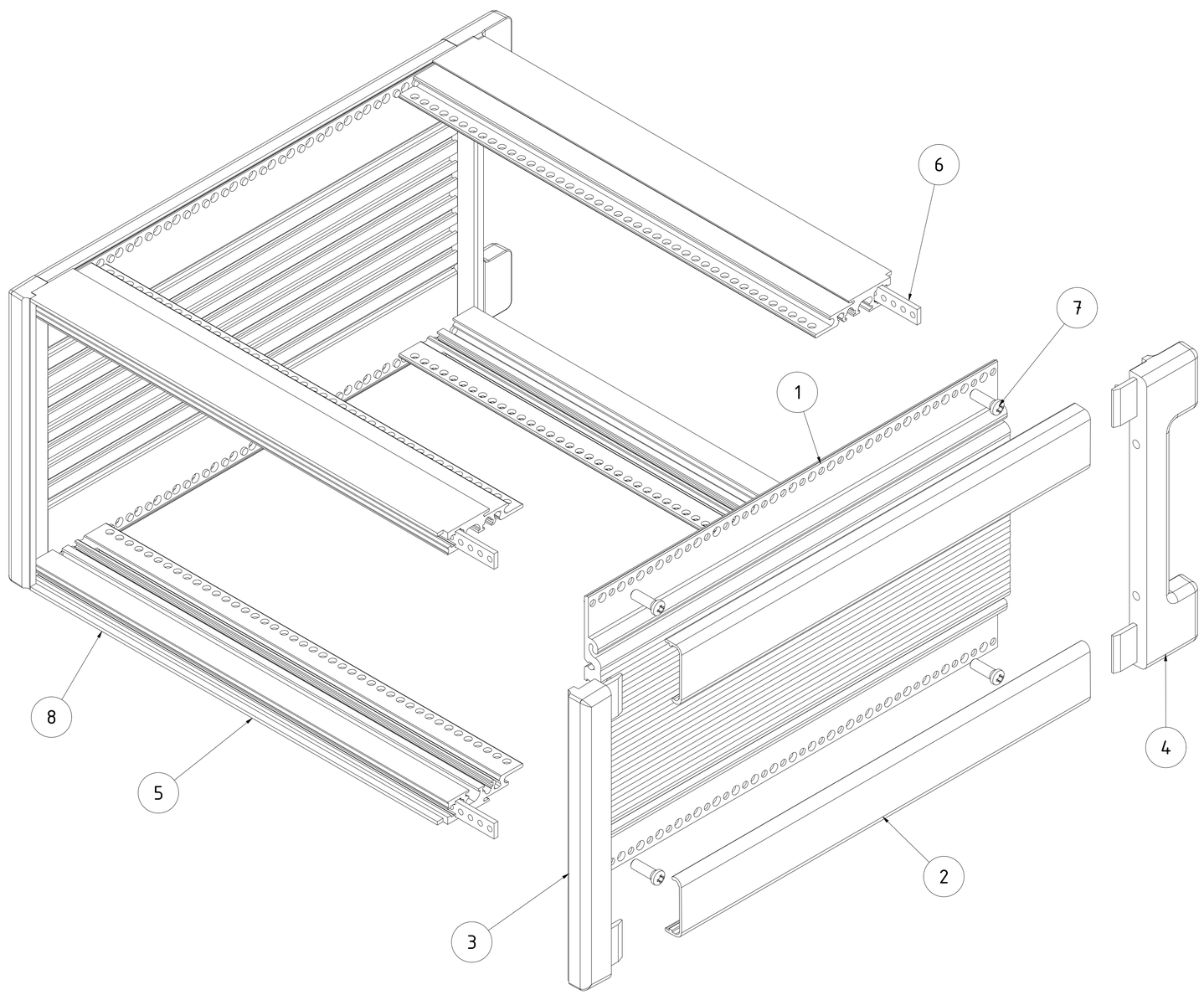
Z-2903304