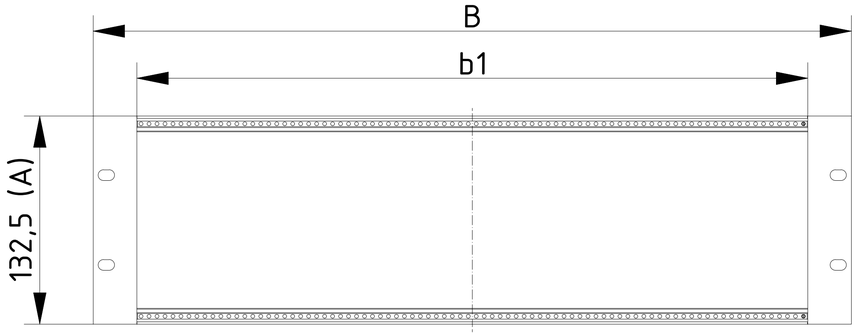

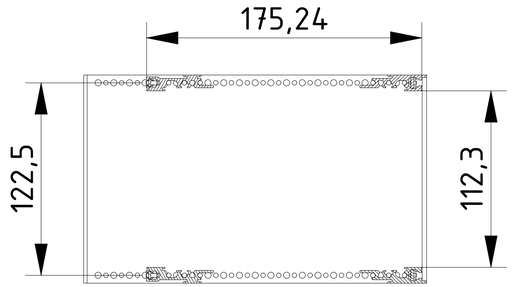
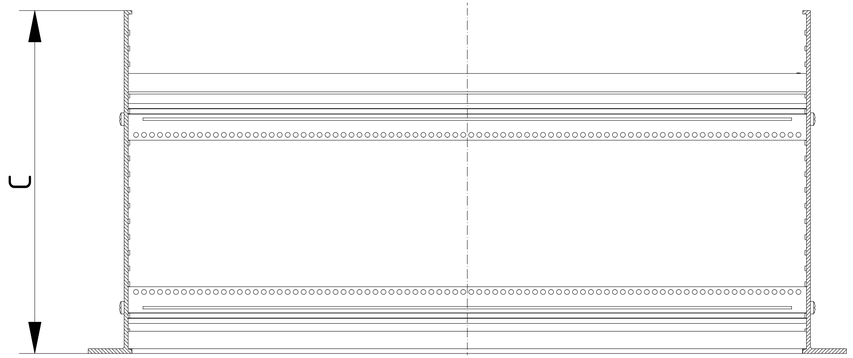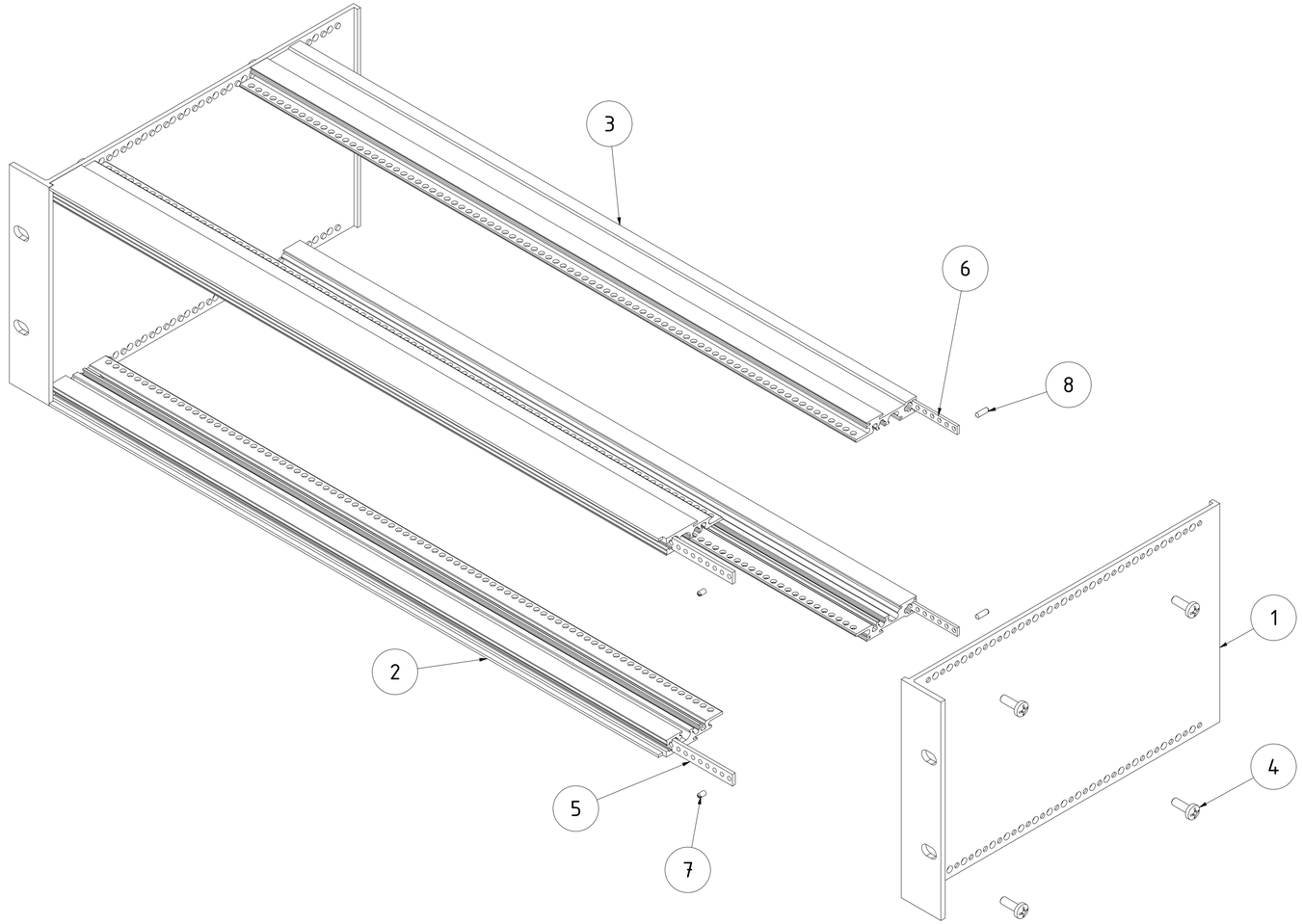
Z-2903313