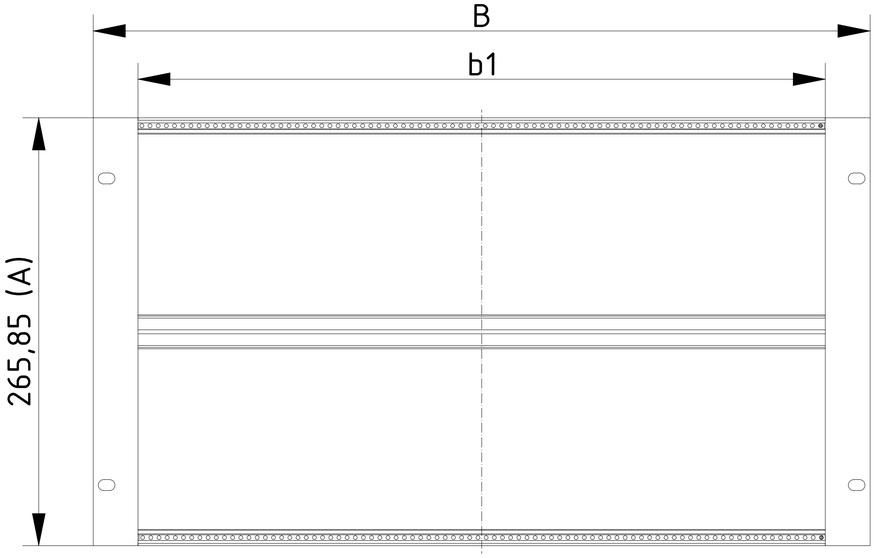

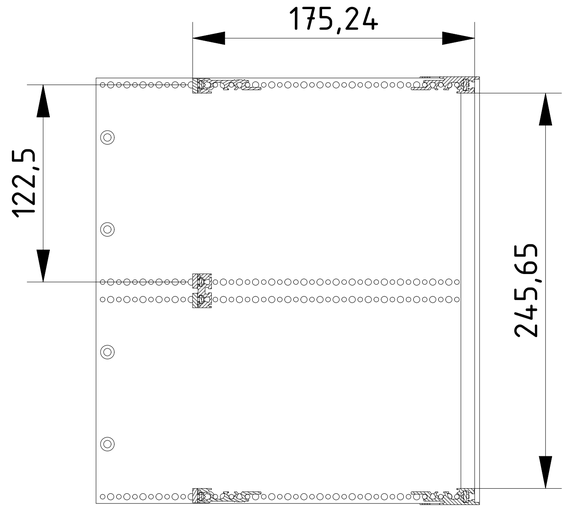
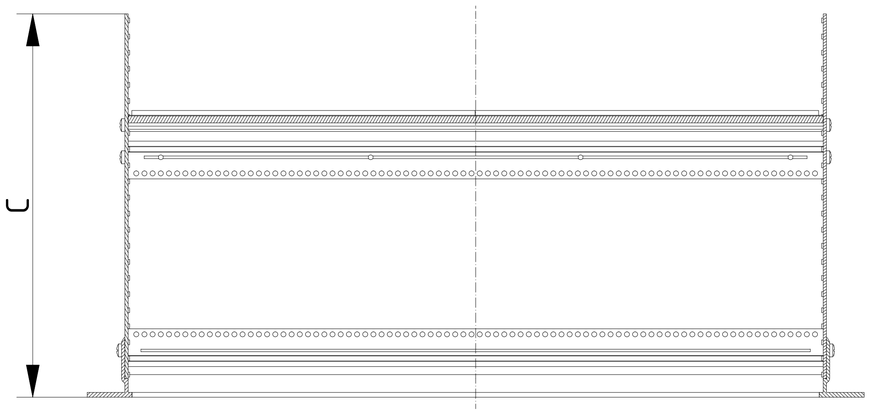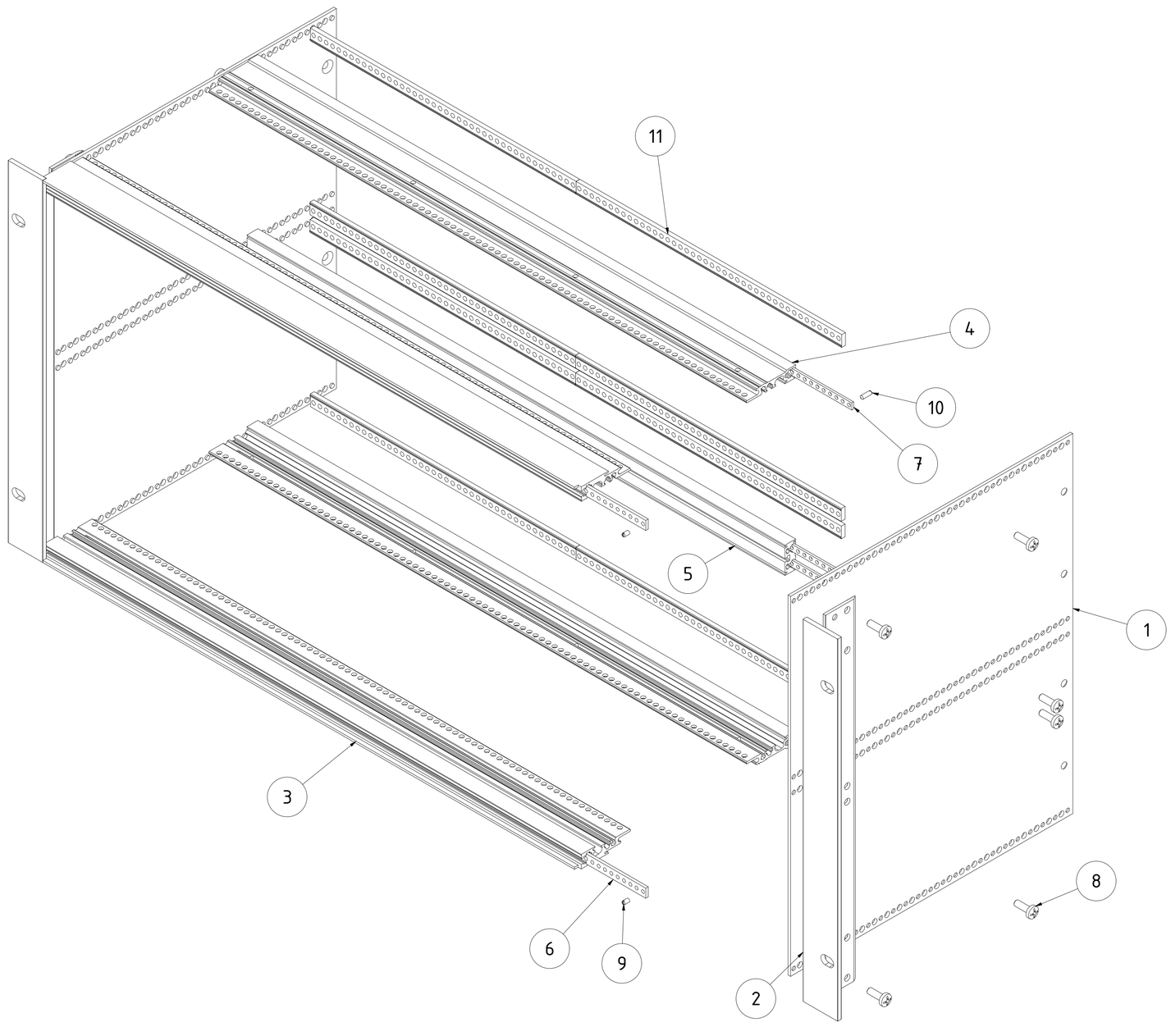
Z-2903306